TELESCOPIC TOWER FOR WIND ENERGY PRODUCTION WITH REDUCED ENVIRONMENTAL IMPACT

Prof. A. Pantano

Dipartimento di Ingegneria
Università degli Studi di Palermo

7th International Conference on Small & Medium Wind Energy
21-23 September 2022

INTRODUCTION

Project P.E.R.IM.A. - Palo telescopico per produzione Eolica con Ridotto IMpatto Ambientale

	Time for rising or lowering	Stability	Robustness (Payload Capacity)
Tipper mast	High	High	Low
Hydro-pneumatic tel escopic mast	Low	Low	Very low
Presented telescopic mast (PERIMA)	Low	High	High

designed starting from scratch and solving the various critical issues that have arisen with innovative ideas.

INTRODUCTION

Project P.E.R.IM.A. - Palo telescopico per produzione Eolica con Ridotto IMpatto Ambientale

- **Main drawbacks of wind farms: environmental impact, possible risks for volatile fauna and noise**

- **The aim of the PERIMA project was the development of a telescopic tower that can be easily raised and lowered according to management needs, for a power from 60 to 250 kW and a working height of the propeller greater than 30 m.**

- **The device consists of four main parts: a foundation, a telescopic tower, a self-lifting system, a generator with a two-blade propeller.**

INTRODUCTION

Project P.E.R.IM.A. - Palo telescopico per produzione Eolica con Ridotto IMpatto Ambientale

- **The ability of a frequent displacement could be used in different ways**
- **A first method is to install these systems in areas with significant variability of the resident population, as on small islands or in other places with predominantly tourist destination, where the population is mainly present in the summer.**
- **A second mode would be to maintain the elevation of the tower to the operating height only in the periods with higher wind and to proceed to its lowering in the remaining periods, even in automatic mode or semi-automatic and/or by remote control.**
- **Another option would be to maintain the elevation of the tower only in the night time, thus making the system completely camouflaged throughout the year.**
- **The maintenance of the generator can be carried out at ground level**
- **The tower can be dropped immediately before typhoons**

INTRODUCTION

Project P.E.R.IM.A. - Palo telescopico per produzione Eolica con Ridotto IMpatto Ambientale

- Telescopic tower installed in Caltanissetta, Italy

DESCRIPTION

The Foundation

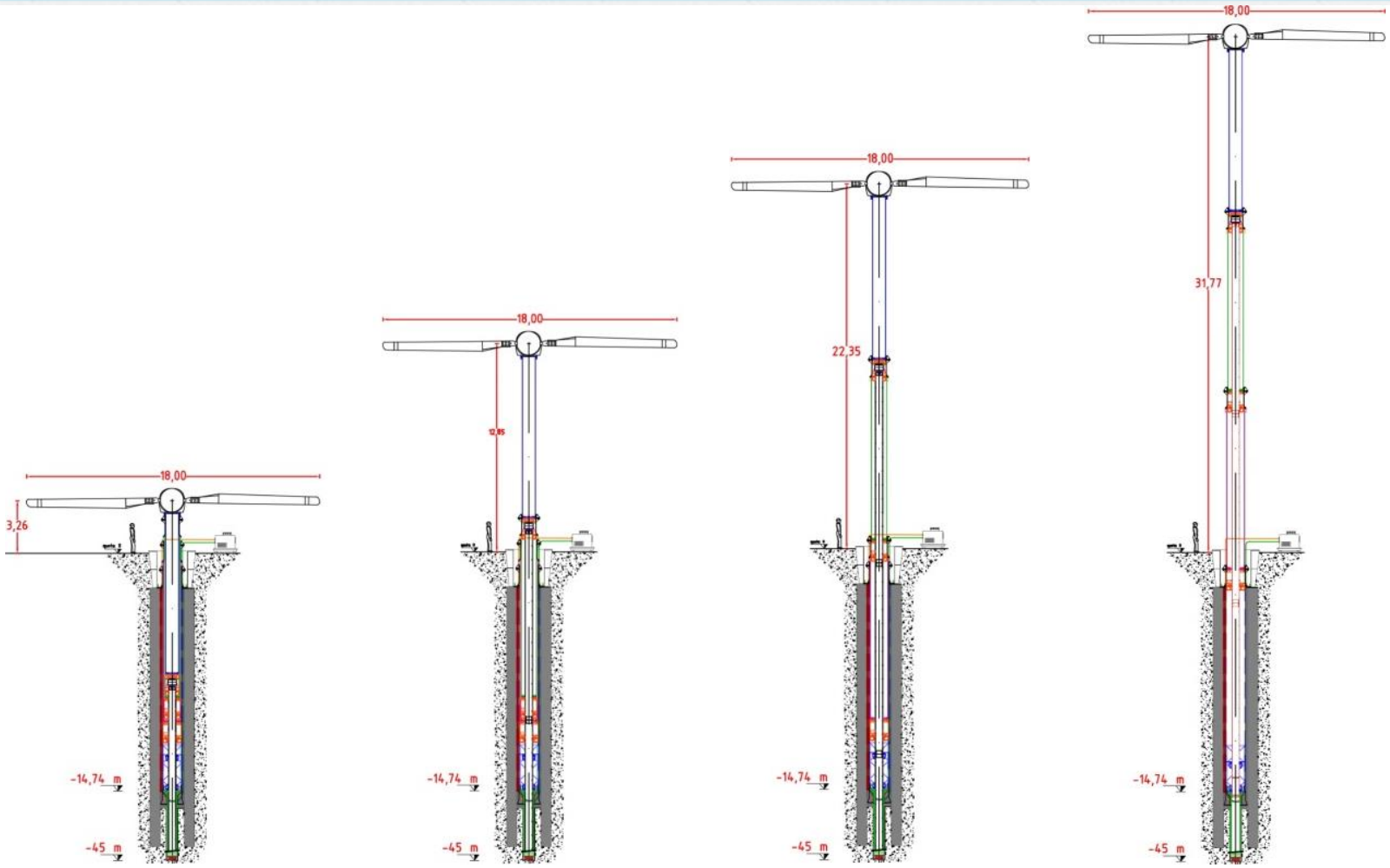

(a) (b) (c) (d)

- **Diametrical section view of the device - Lifting phases of the telescopic tower**

DESCRIPTION

The Foundation

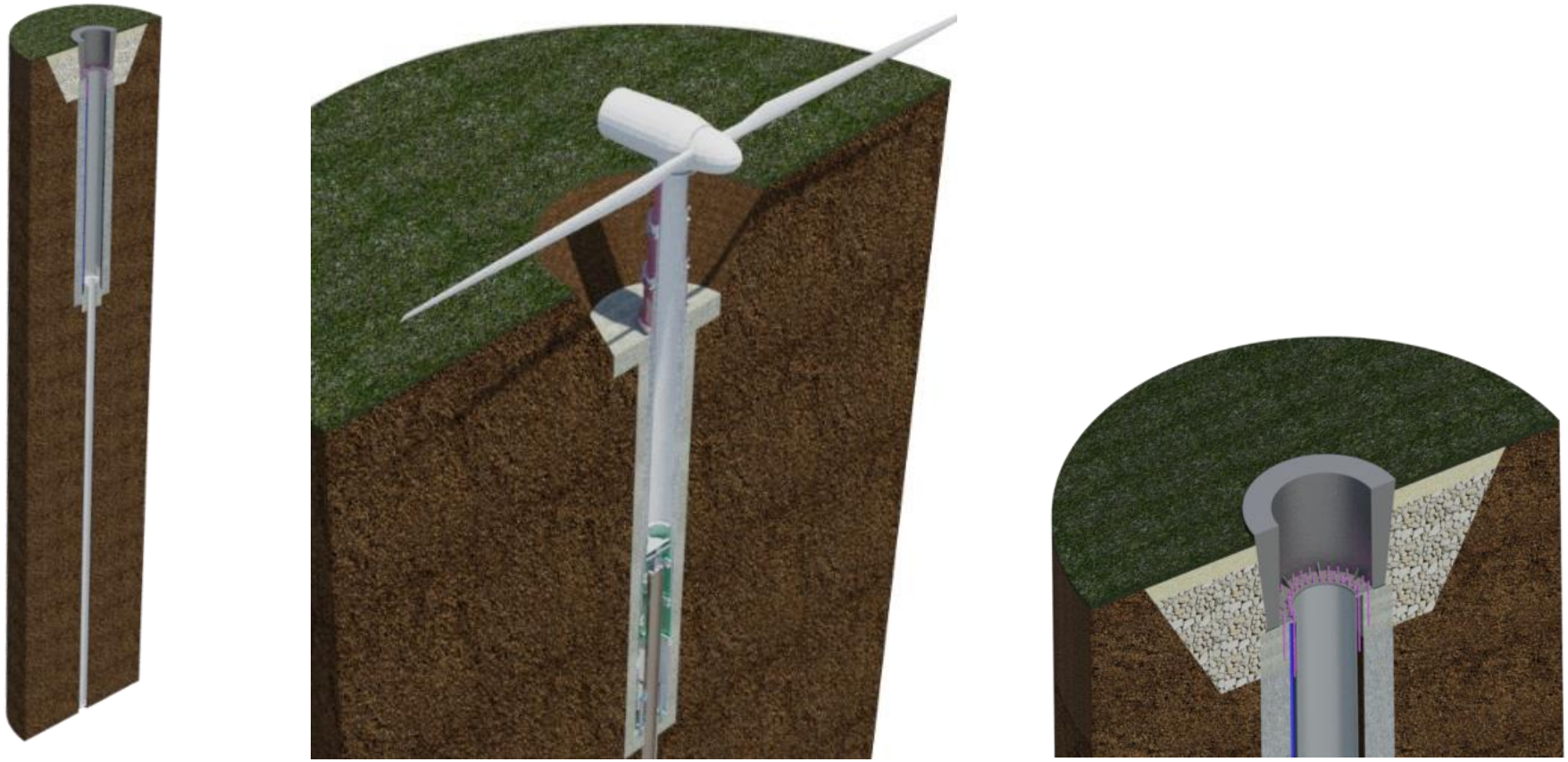

(a) (b) (c)

(a) 3D view in diametrical section of the device and its foundation, (b) Detail of the foundation - connecting flange to the telescopic tower, (c) Detail of the foundation - smaller diameter shaft that houses the thrust piston

DESCRIPTION

Telescopic Coupling System

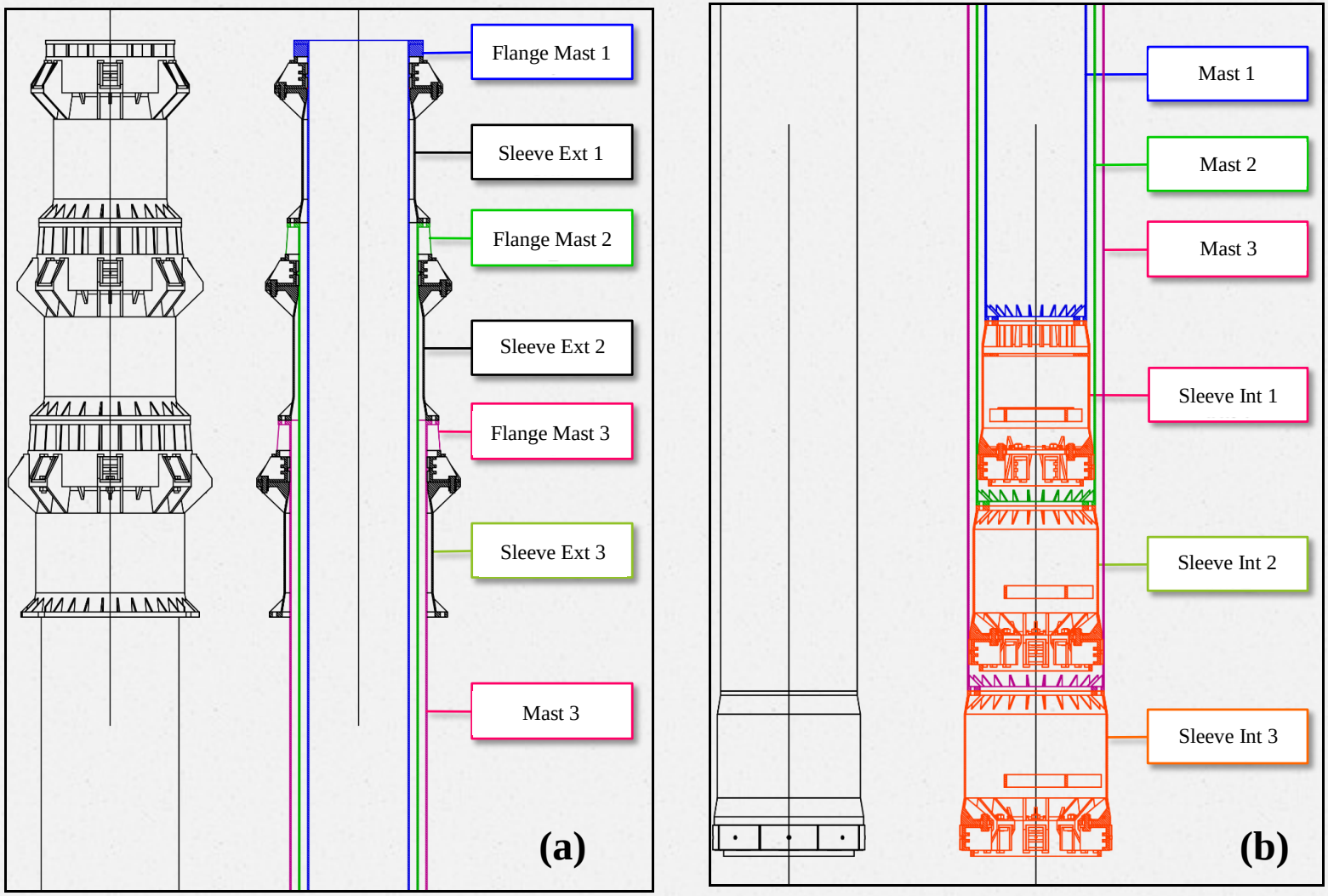

- **Schematic draft of the coupling between masts and sleeves: (a) upper part of the masts, (b) lower part of the masts**

DESCRIPTION

Telescopic Coupling System

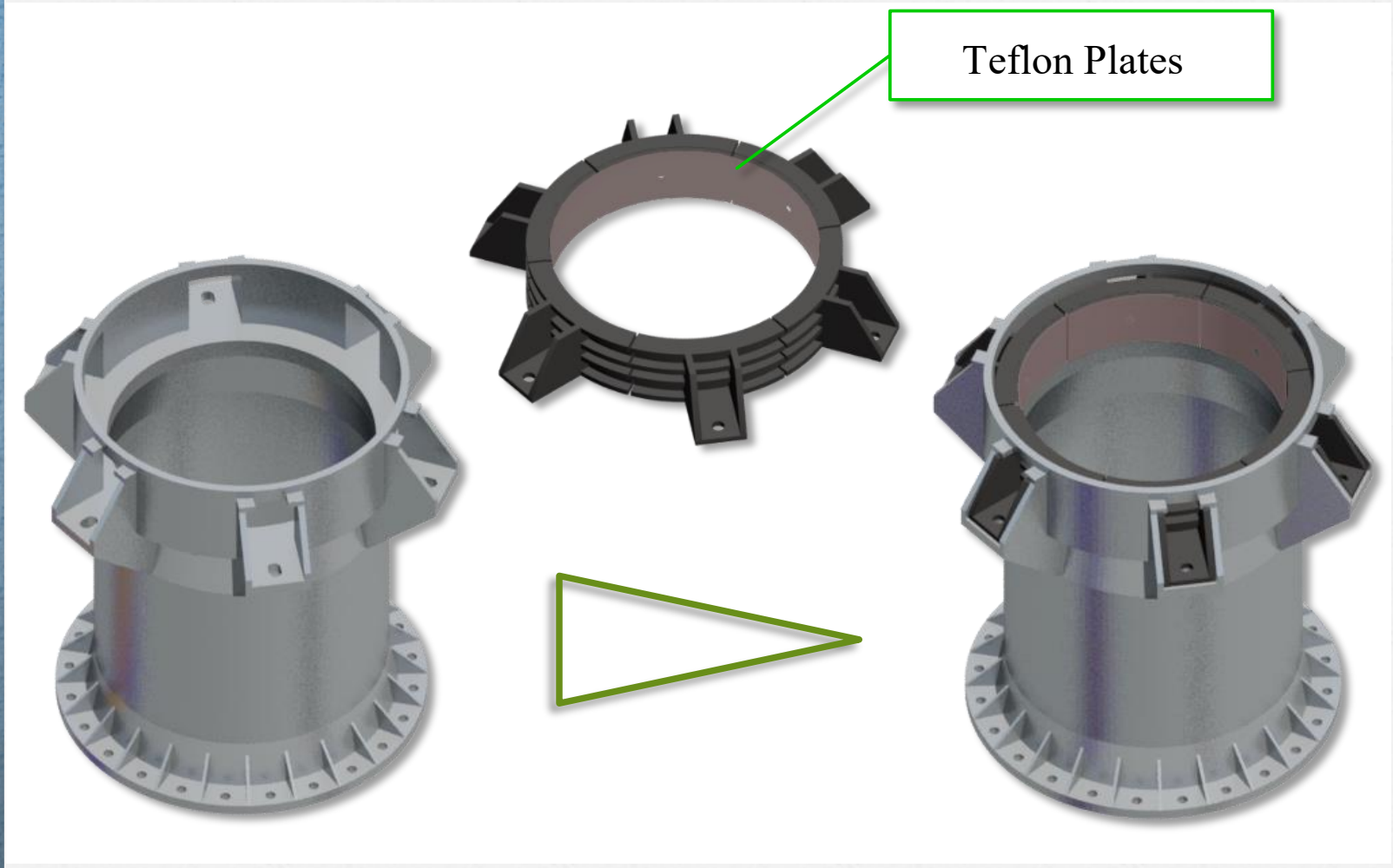

- **Outer sleeve**

DESCRIPTION

Telescopic Coupling System

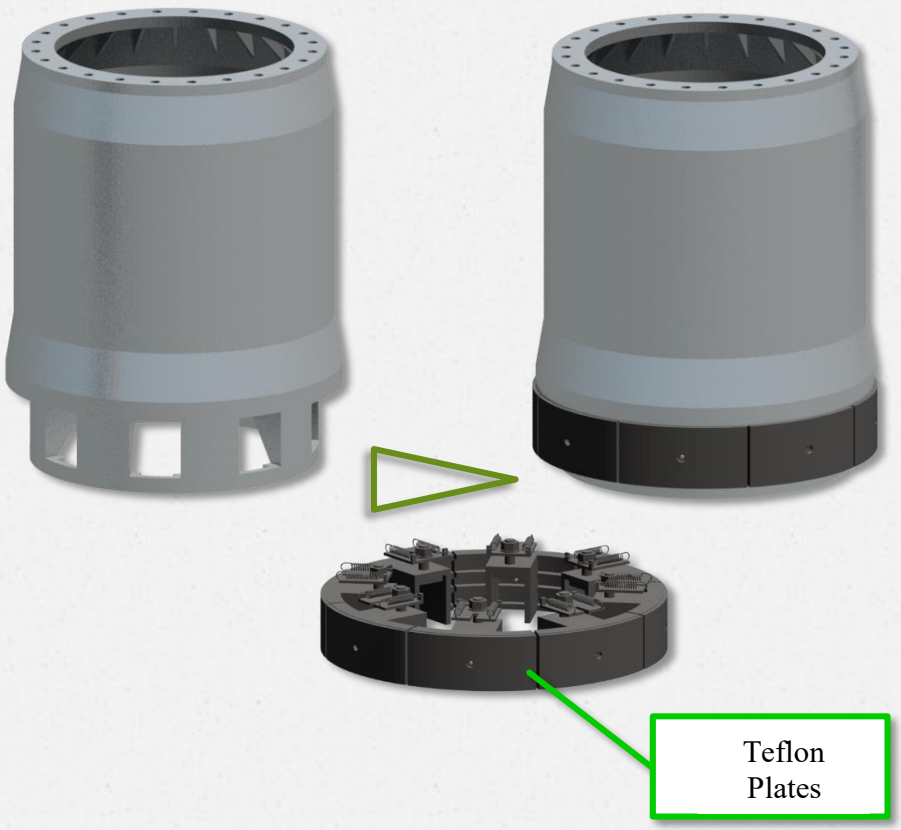

- **Inner sleeves**

DESCRIPTION

Thrust Piston

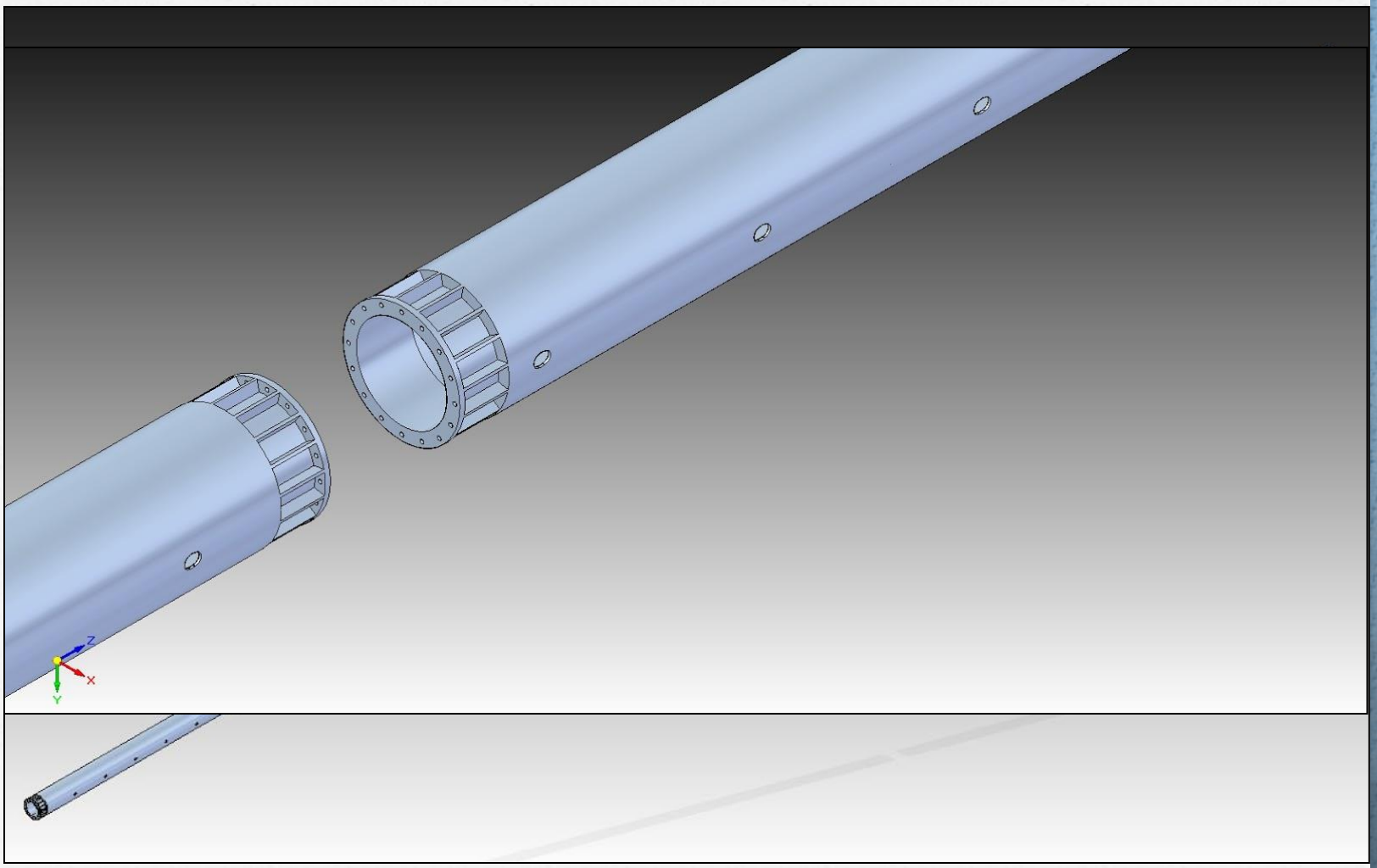

- **Thrust piston**

DESCRIPTION

Lifting system - Jack-up

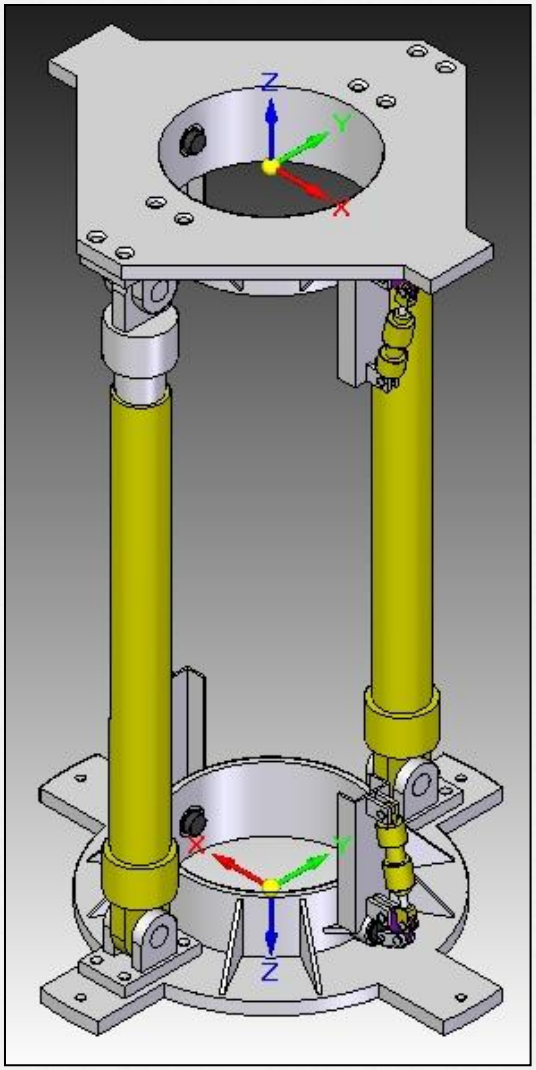

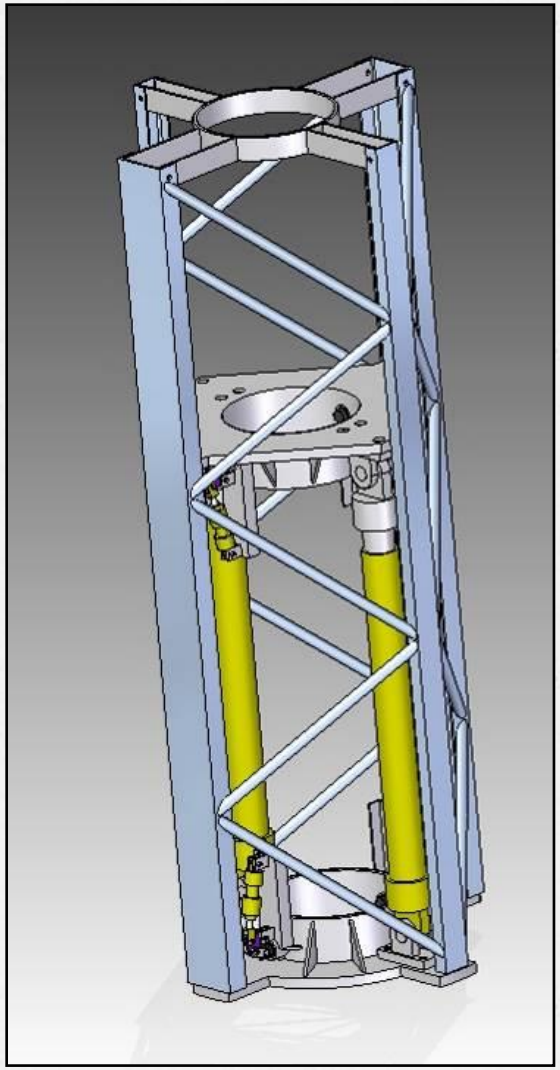

- **Lifting system - Jack-up (CAD)**

DESCRIPTION

Lifting system - Jack-up

- **Lifting system - Jack-up (Photo)**

DESIGN

Materials

Steel for the components of the tower		Mechanical properties		
Components	**Material**	**σ_R (Mpa)**	**σ_s (Mpa)**	**ΔL %**
Structure and main elements	*S320*	*390*	*320*	*17*
Pegs and seats for lower and upper jack-up bushes	*Steel 39NiCrMo3*	*740 ÷ 1180*	*540 ÷ 785*	*11 ÷ 13*
Bushes on jack-up rings	*Steel E410*	*520 ÷ 750*	*410 ÷ 590*	*12 ÷ 22*
PTFE for telescopic coupling		**Mechanical properties**		
Component	**Material**	**σ_R (Mpa)**	**σ_c (Mpa)**	**ΔL %**
Teflon plates	*PTFE G400*	*> 24*	*4 ÷ 5*	*> 250*
Teflon plates on the larger outer sleeve (Sleeve ext 3)	*PTFE G403 Loaded (15% Glass)*	*17 ÷ 24*	6 ÷ *7*	*250 ÷ 300*

DESIGN

Forces acting on the structure

- The wind acts on the exposed parts: the turbine, the blades, the spinner and the generator box and on the three main sections of the telescopic tower

- The tower has been designed to be raised and lowered even in the presence of wind speeds up to 27 m/s, about 97 km / h

- After calculating the forces acting on the structure, the stresses in the most loaded point, i.e. at the foot of the tower and therefore on the sleeve 3, were determined. The resulting bending moment is equal to 333249 Nm and the shear force equal to 14264 N

Blades		Wind turbine body	Tower	
a (m)	b (m)	radius (m)	Frontal section (m)	h (m)
7.8	0.6	0.75	0.87	32

DESIGN

Telescopic Coupling

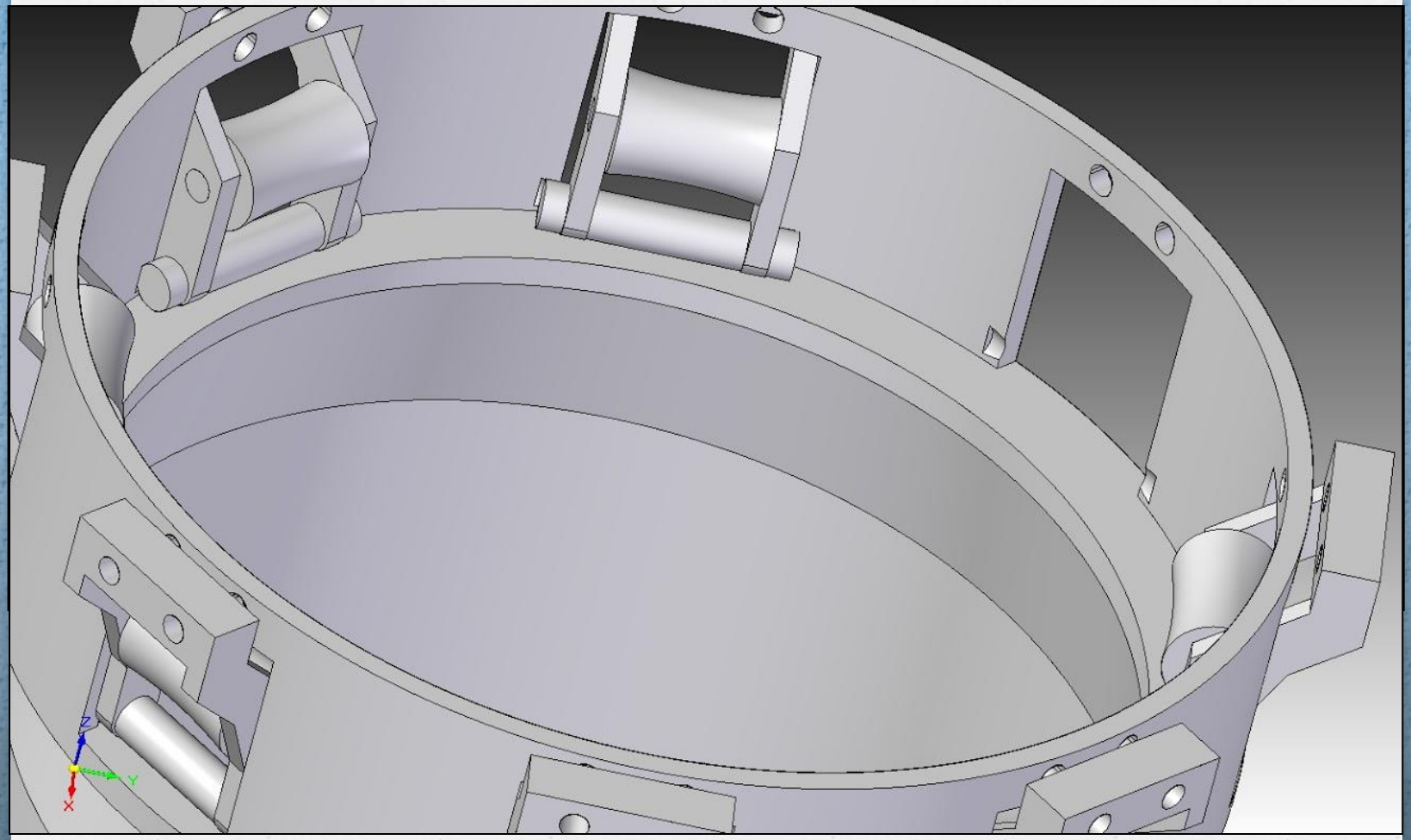

- Design using rollers

DESIGN

Telescopic Coupling

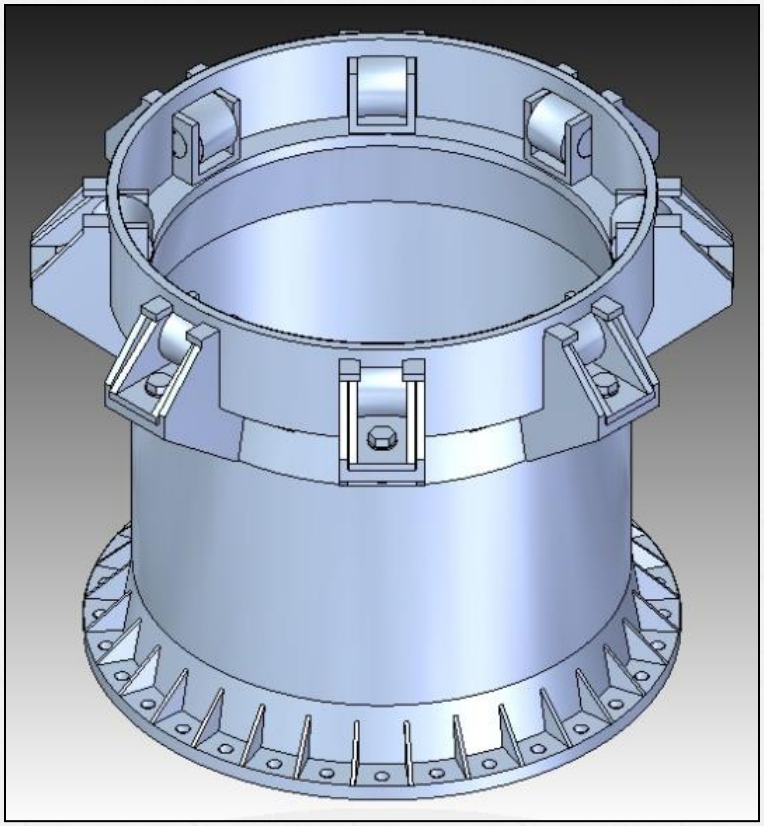

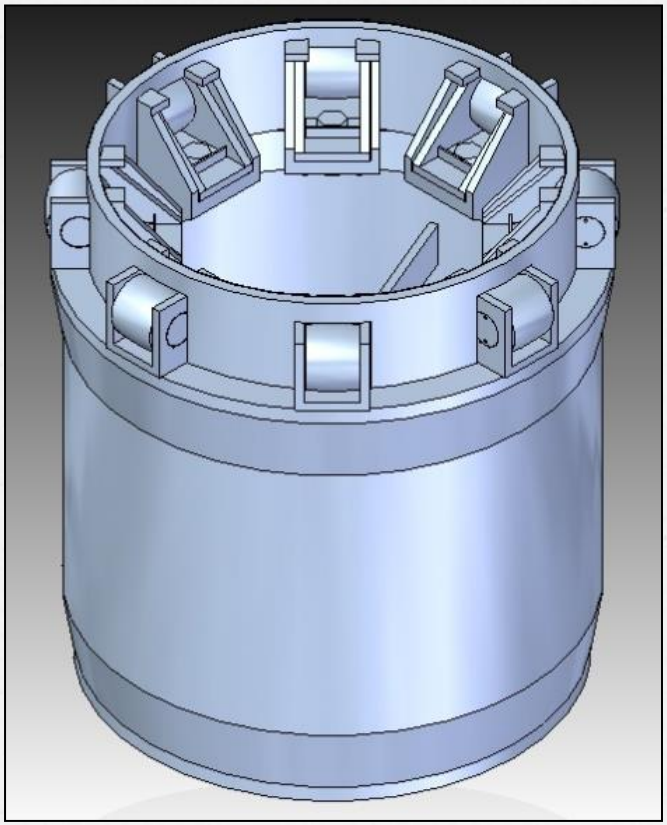

- **Drawer roller system design applied to: (a) outer sleeve 3, (b) inner sleeve 3**

DESIGN

Telescopic Coupling

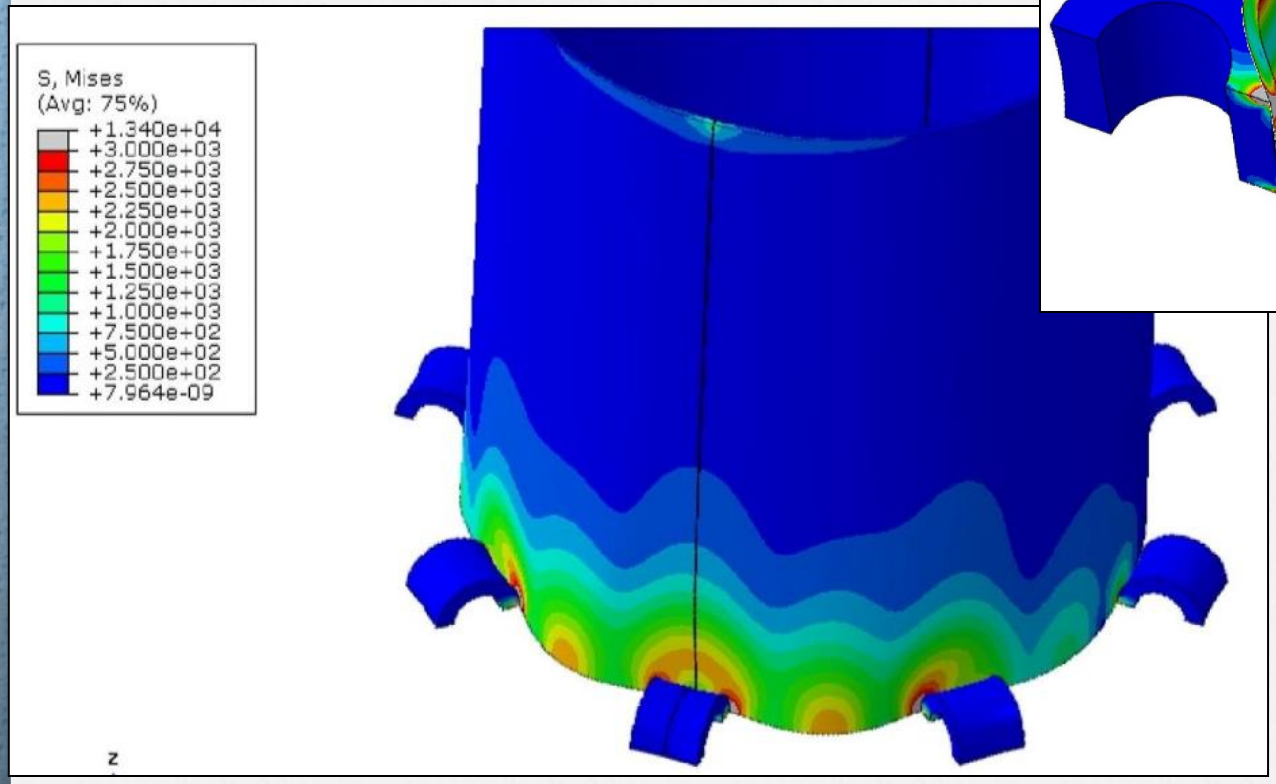

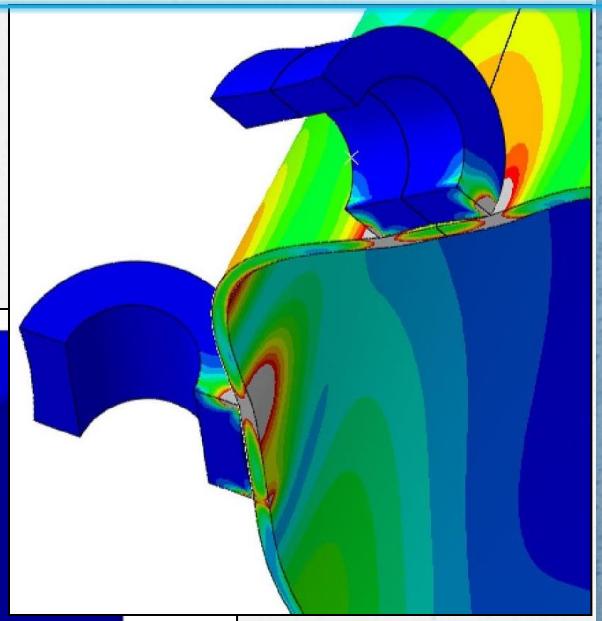

- **Distribution of the von Mises's stress on the rollers and on the larger pole when wind speeds is 97 km/h, obtained by FEM.**

DESIGN

Telescopic Coupling

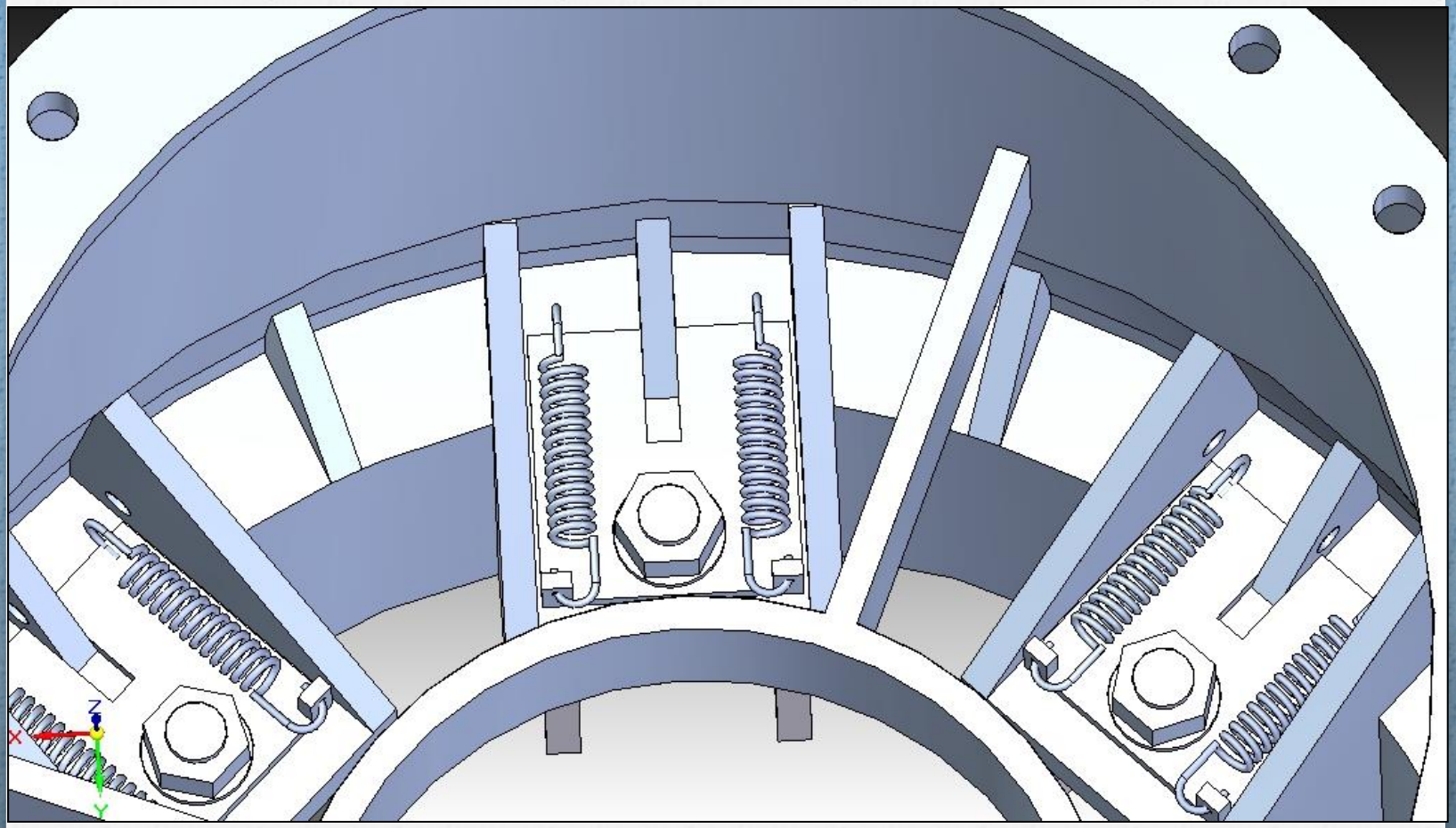

- **Design using Teflon plates applied to: (a) outer sleeve 3, (b) inner sleeve 3**

DESIGN

Telescopic Coupling

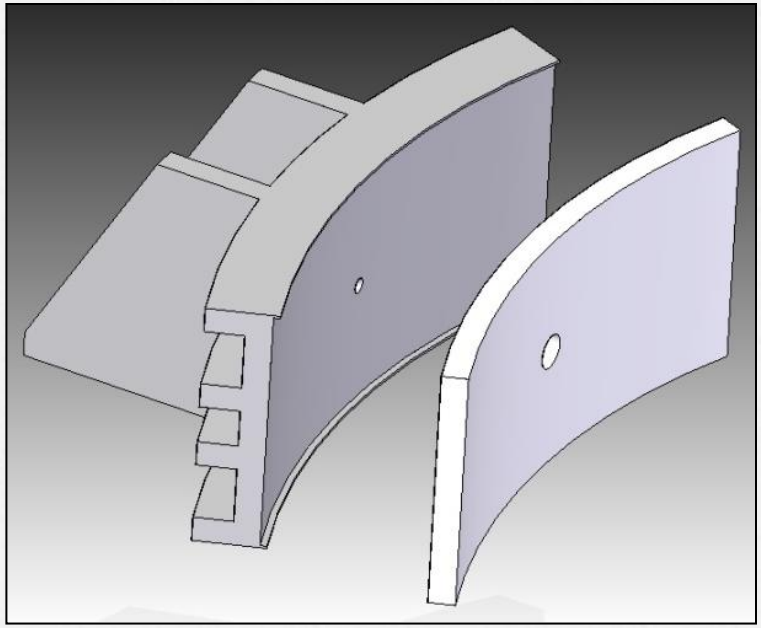

(a)

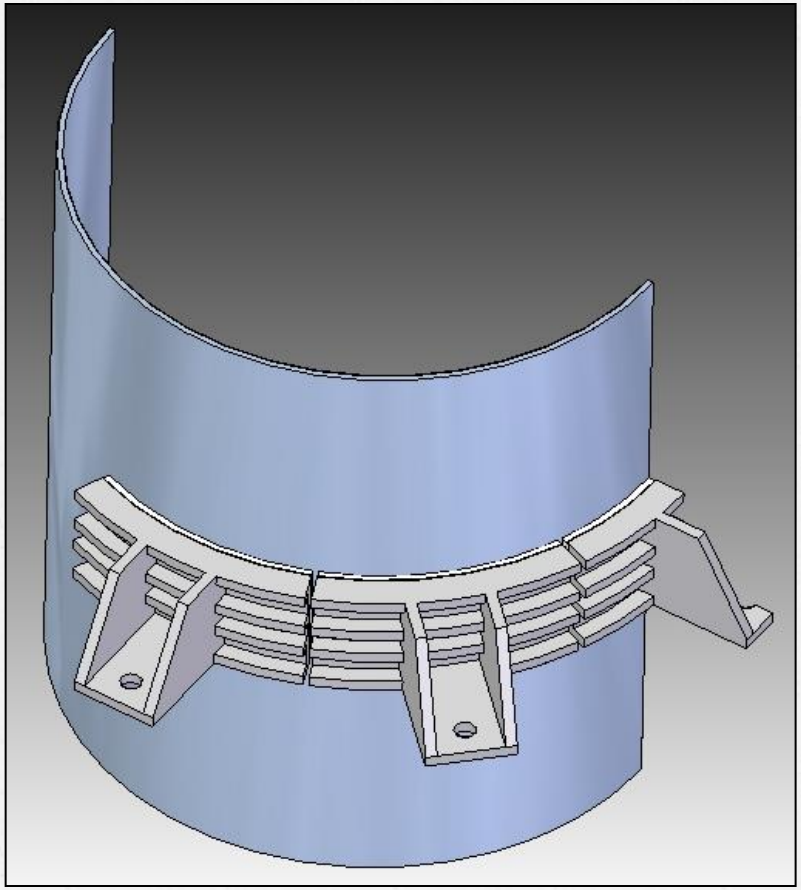

(b)

- Supporting drawer and relative Teflon plate used to realize the axial sliding between the three poles that make up the telescopic tower

DESIGN

Telescopic Coupling

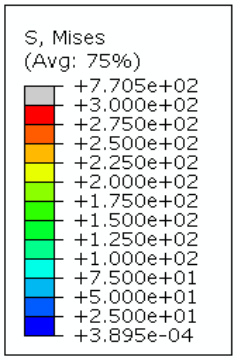

(a)

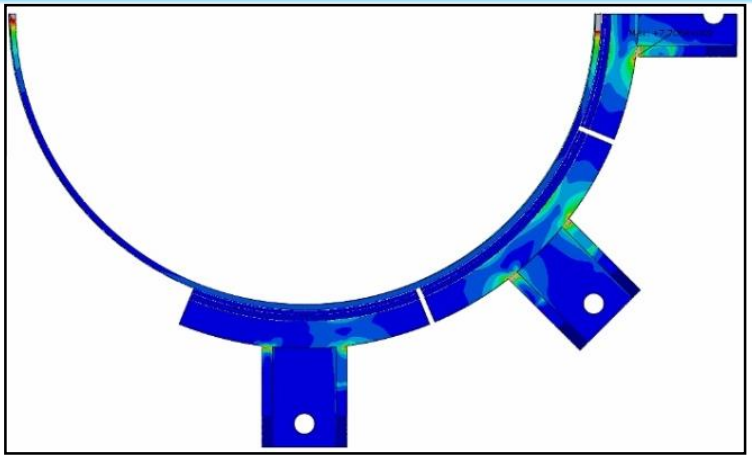

(b)

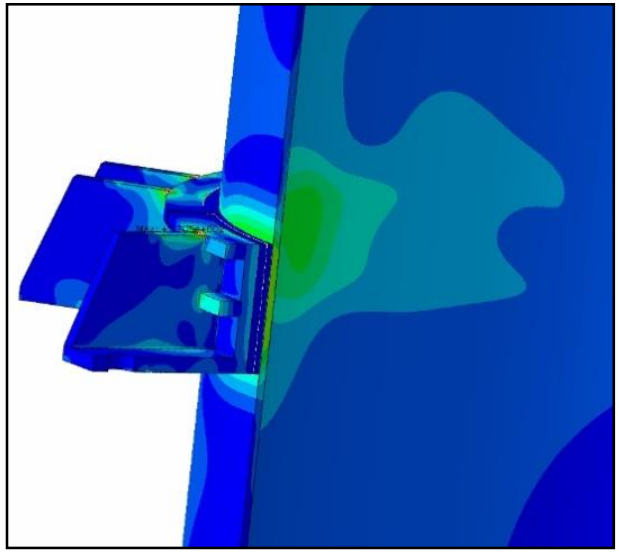

(c)

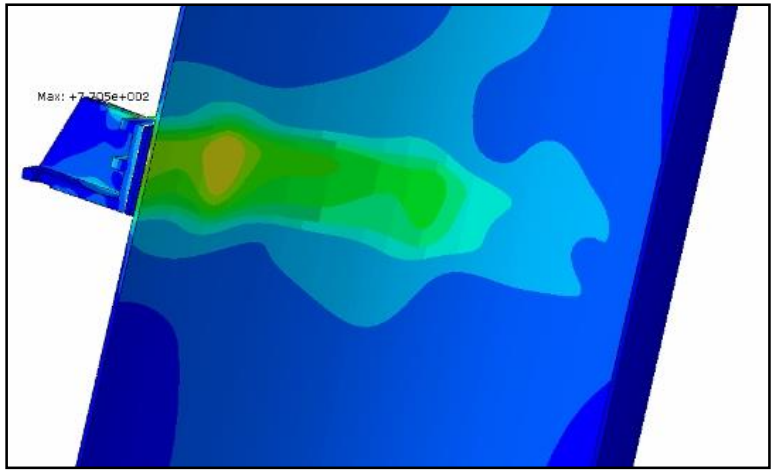

(d)

- **Distribution of the von Mises's stress on the support drawers, Teflon plates and pole 3 when wind speeds is 97 km/h.**

DESIGN

Telescopic Coupling

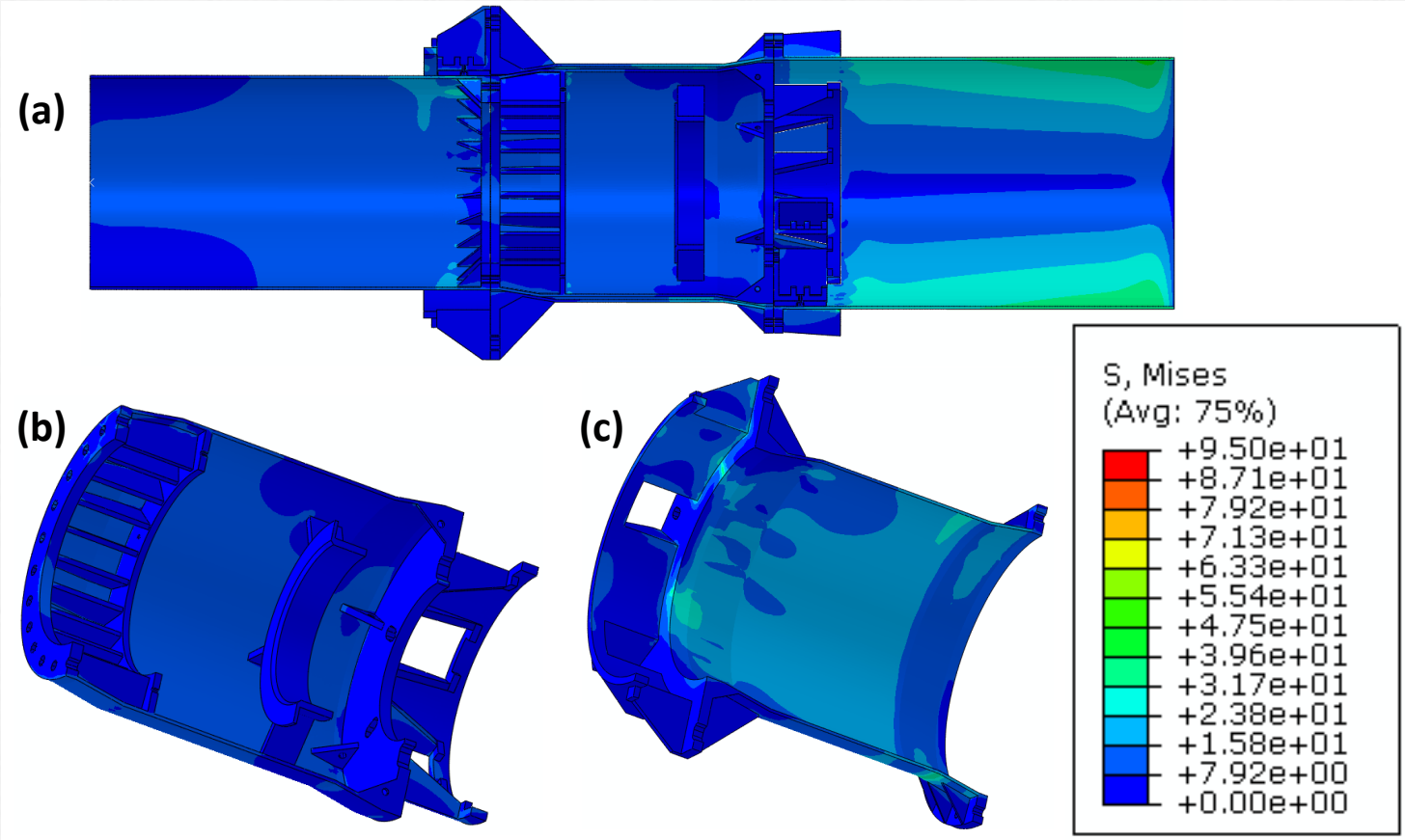

- **Distribution of the von Mises's stress on the sleeves Int 1 and Ext 1 and the masts 1 and 2 when wind speeds is 97 km/h**

DESIGN

Telescopic Coupling

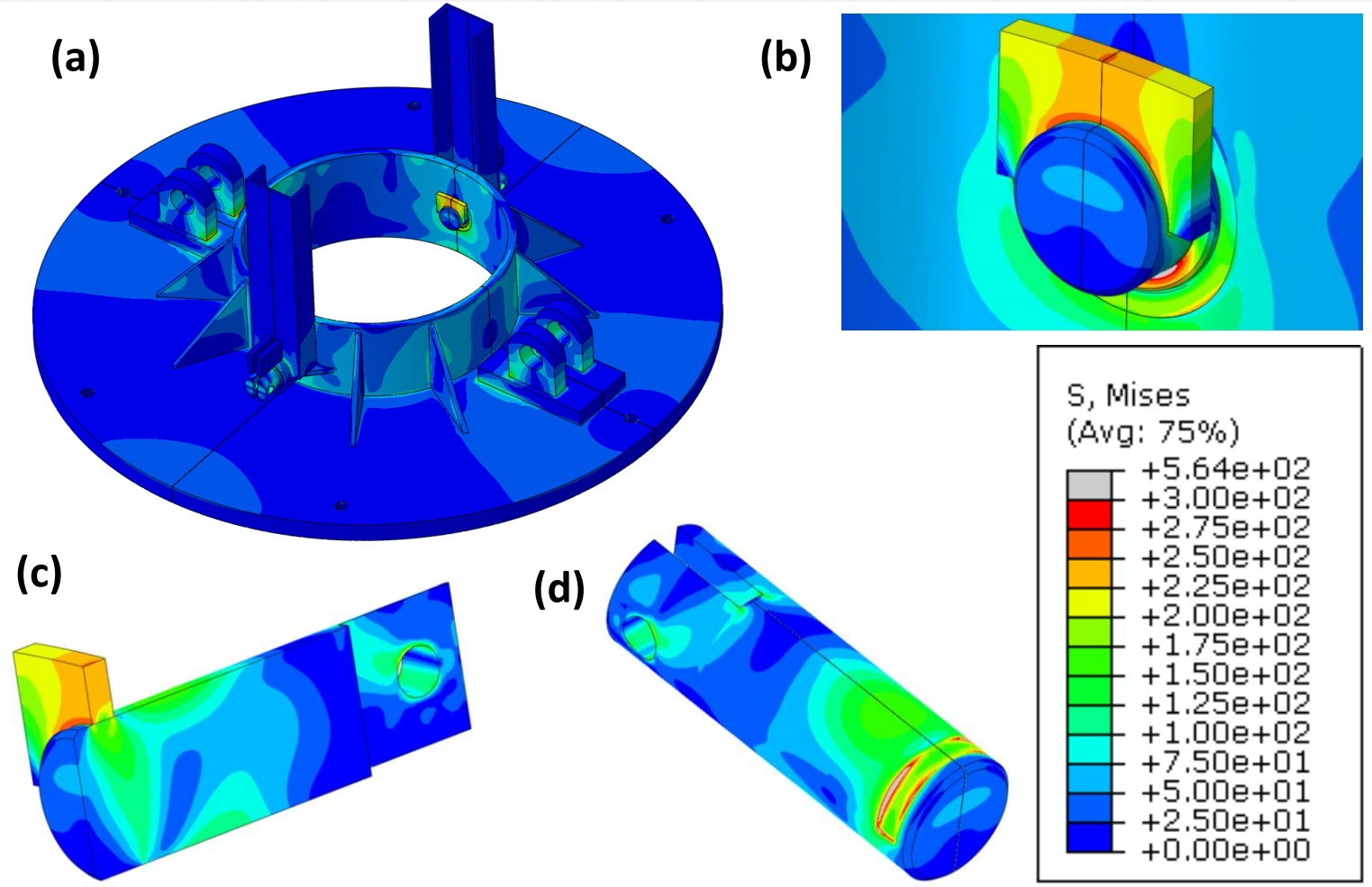

- **Von Mises stress maps of the lower ring assembly**

DESIGN

Uncoupling and Tensioning System

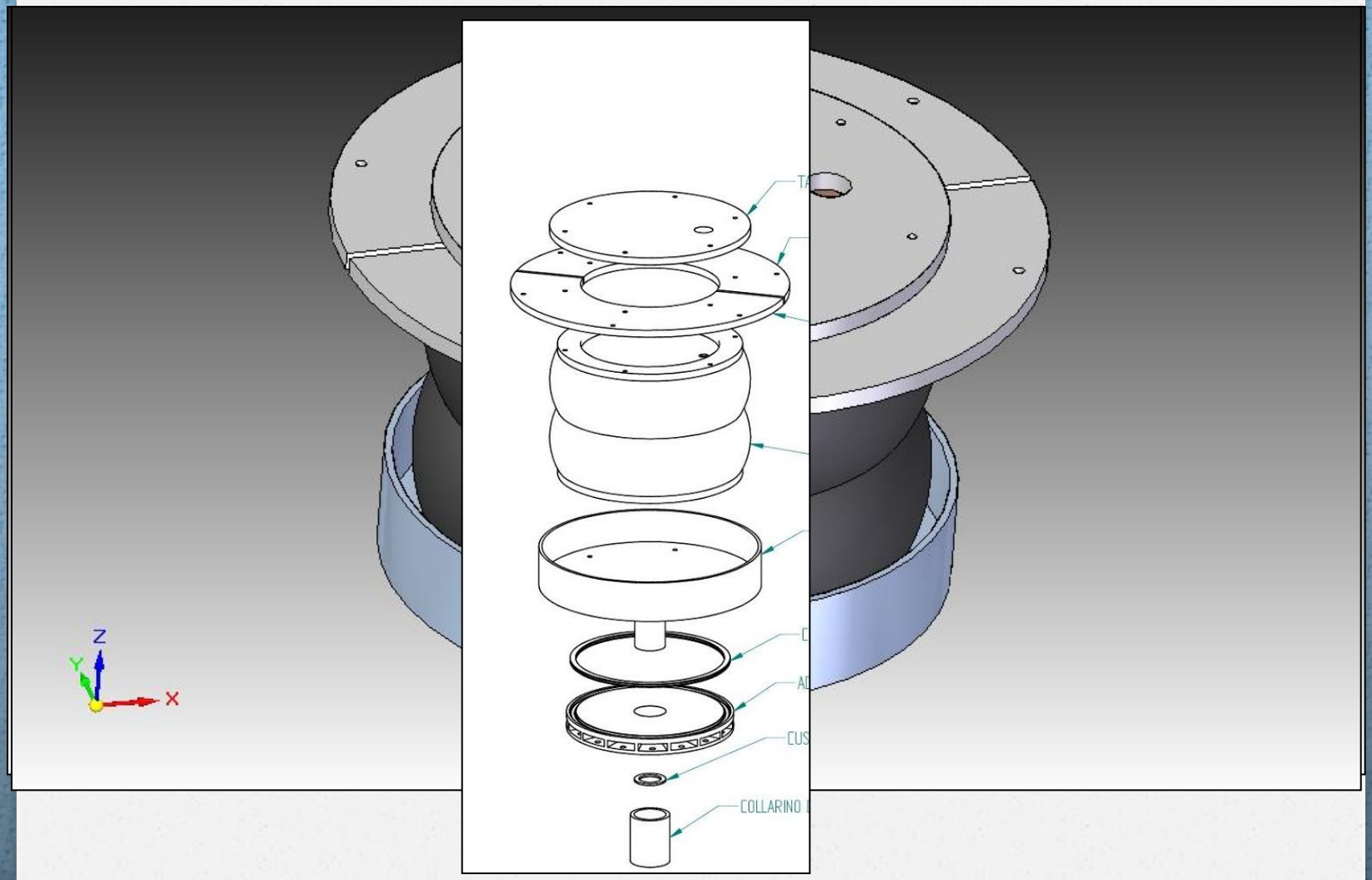

- Uncoupling and tensioning system by means of an air spring

CONCLUSIONS

- **A prototype of a telescopic tower for wind production and the related lifting system for a turbine with power from 60 to 250 kW and a height of 30 m was designed and built**

- **The tower is raised and lowered by means of automatisms or by remote control, allowing to differentiate its presence over time**

- **Lacking a state of the art to refer to, the telescopic tower and its lifting system have been designed starting from scratch and solving the various critical issues that have arisen with innovative ideas**

- **Regarding the mechanical design we only presented the design process that led to the final version of the coupling system between poles and sleeves.**

- **The prototype was installed in Caltanissetta and successfully tested**

Thanks for your attention

Thanks for your attention