SUSTAINABLE POWER SUPPLY FOR REMOTE RADIO LINK STATIONS IN GREENLAND BASED ON DC MICRO GRID

AARHUS UNIVERSITET
INGENIØRHØJSKOLEN AARHUS UNIVERSITET

FINN JENSEN
ASSISTANT PROFESSOR

AARHUS UNIVERSITY

SCIENCE AND TECHNOLOGY

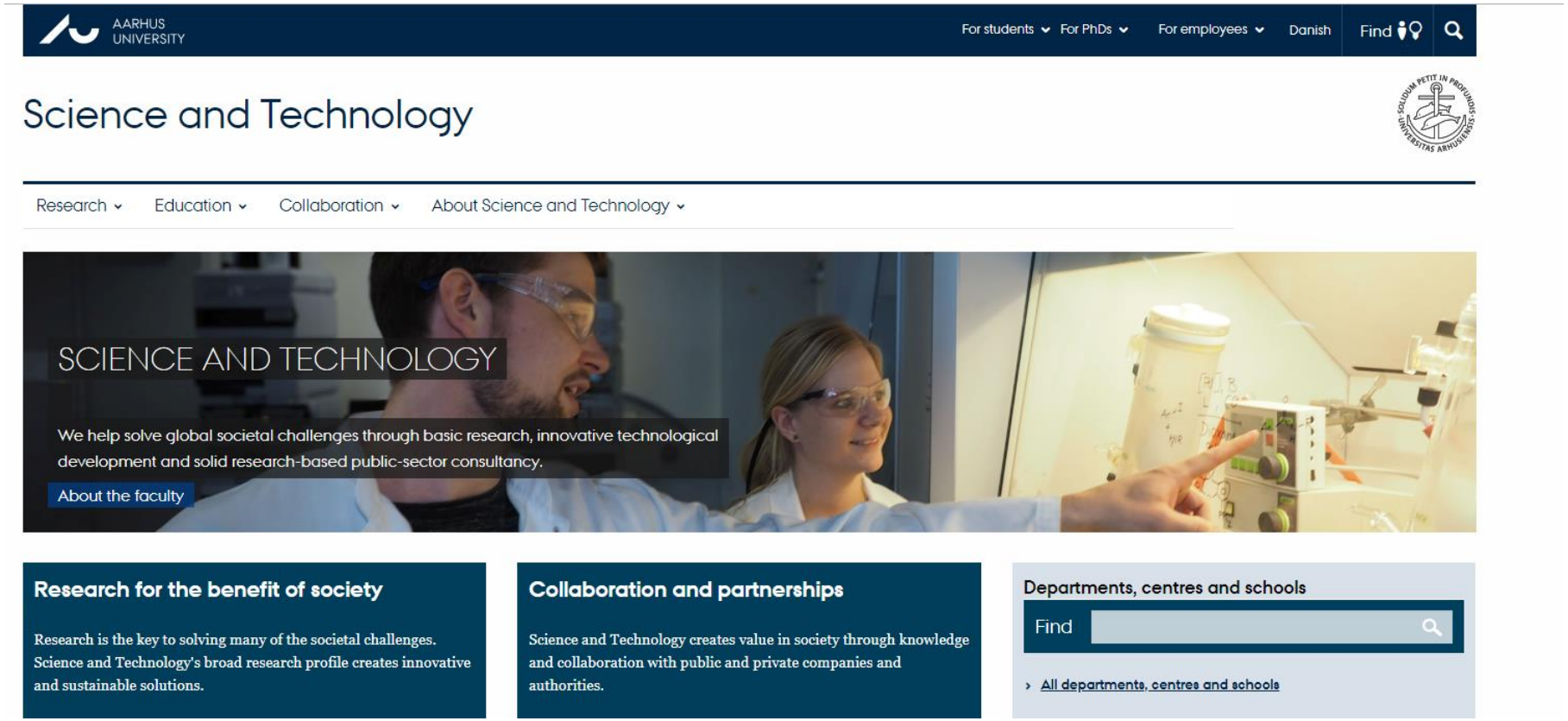

SCIENCE AND TECHNOLOGY

- Classical science subjects
- Engineering
- Agricultural sciences
- Food research
- Environmental science.

Science and Technology key figures

- Student population 2017: 6,766
- PhD students 2017: 649
- Employees 2017: 2,985
- Publications 2017: 4,265

Science and Technology:
13 Bachelor's programmes
13 Bachelor of Engineering
10 Master's in Engineering
21 Master's programmes

ELECTRICAL ENERGY TECHNOLOGY

Conversion and Transport of Electrical Energy

- **Electrical production**
  - Central production
  - Decentral production
- **Transport and Storage of Electrical Energy**
  - Reliable Energy supply
  - Safety
- **Use of Electrical Energy**
  - Use as little as possible
  - Energy savings
  - Smart energy usage

Som diplomingeniør i Elektrisk energiteknologi får du en nøglerolle i udviklingen af en bæredygtig energiforsyning i Danmark og resten af Europa. Uddannelsen giver dig indgående kendskab til energisektoren og højt specialiseret teknisk viden om design af elektriske systemer. Du lærer også at bruge denne viden til at udvikle produkter, der producerer og forbruger elektrisk energi.

ELECTRICAL ENERGY TECHNOLOGY

AARHUS
UNIVERSITET
INGENIØRHØJSKOLEN AARHUS UNIVERSITET

FINN JENSEN
ASSISTANT PROFESSOR

BACHELOR PROJECT

Sustainable power supply for remote radio link stations in Greenland based on DC micro grid

https://telepost.gl/da/nyheder/tele-post-laver-forsoeg-med-groen-energi

TELE - POST

Nyheder og presse | Baggrund | Job og uddannelse

TELE-POST laver forsøg med grøn energi

12/07/2019 - 08:30

TELE-POST ønsker at gøre radiokæderne mere bæredygtige og spare ressourcer på driften. Derfor laver TELE-POST nu et forsøg med vindmøller.

Grønland har omkring 50 radiokædestationer langs vestkysten, der sikrer de fleste byer og bygder internetforbindelse. TELE-POST bruger i dag mange ressourcer på at leje helikoptere og sende medarbejdere op for at fylde brændstof i tanke på radiokædestationerne.

BACHELOR PROJECT

The telecommunications infrastructure consists of digital radio link from Nanortalik in South Greenland to Uummannaq in North Greenland.

- Often placed in remote areas
- Own off-grid energy production

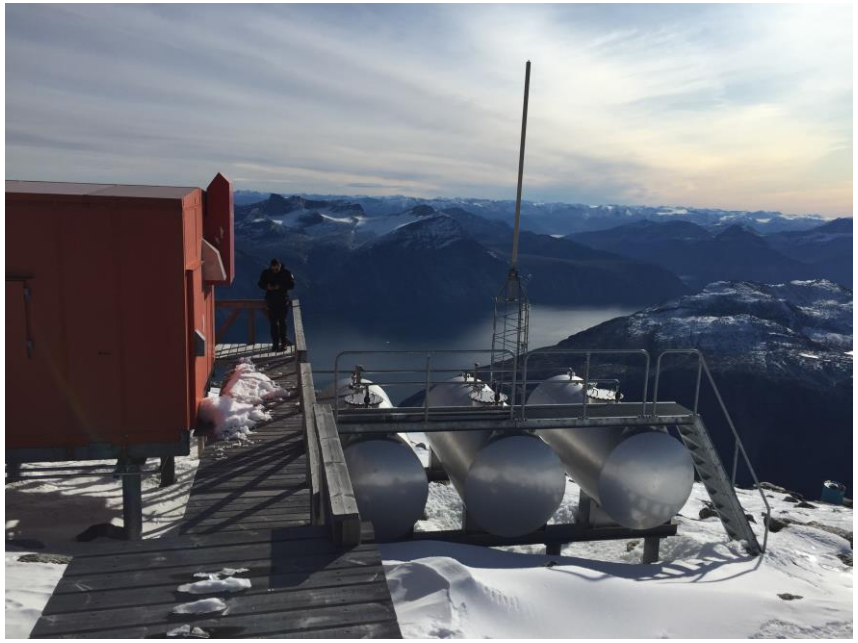

BACHELOR PROJECT

The telecommunications infrastructure consists of digital radio link from Nanortalik in South Greenland to Uummannaq in North Greenland.

- Often placed in remote areas
- Own off-grid energy production

Today

- Traditional AC system
  - Diesel generator
  - Solar panel
  - Battery storage

BACHELOR PROJECT

The telecommunications infrastructure consists of digital radio link from Nanortalik in South Greenland to Uummannaq in North Greenland.

- Often placed in remote areas
- Own off-grid energy production

Tomorrow

- Micro grid DC system
  - ~~Diesel generator~~
  - Solar panel
  - Battery storage
  - Wind mill

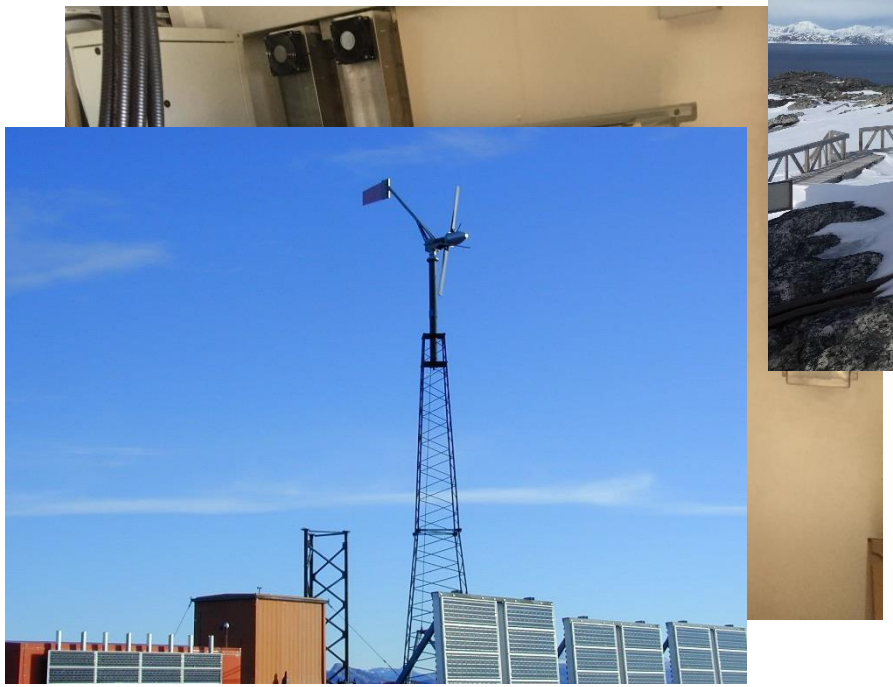

DC MICRO GRID

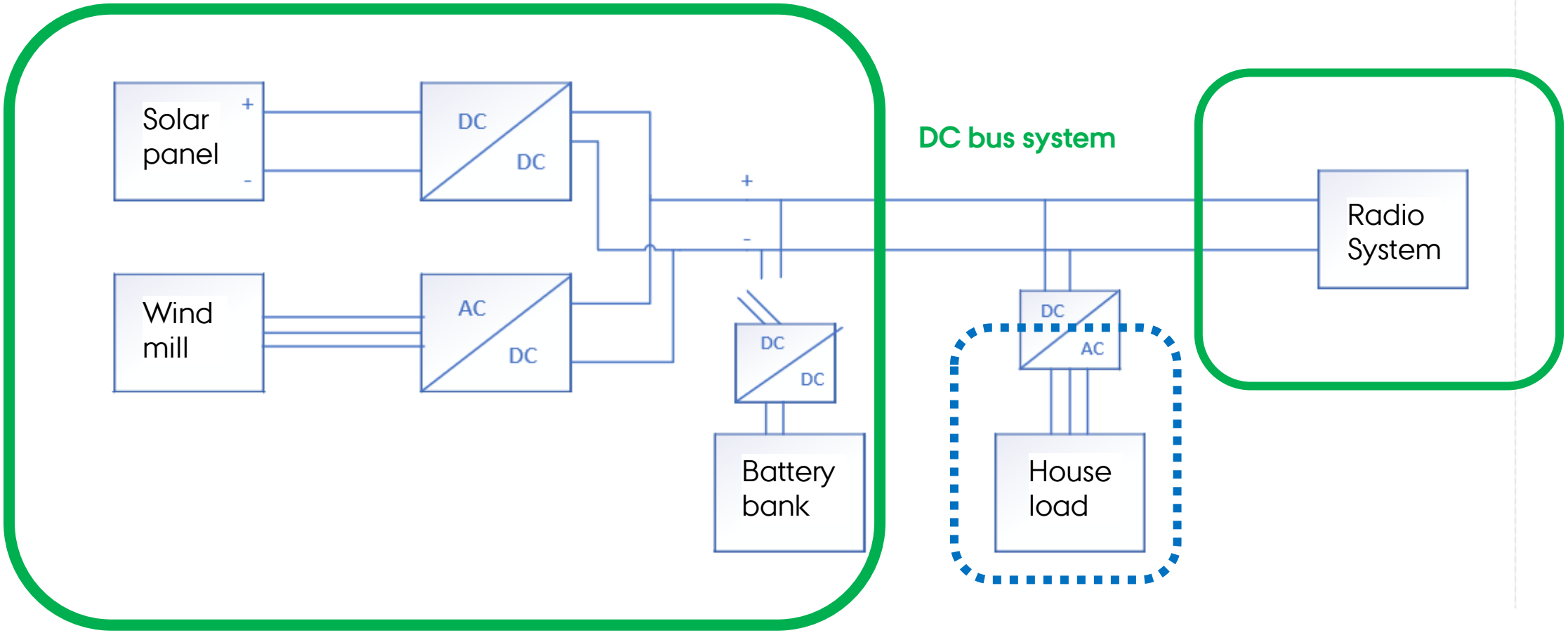

SYSTEM DEMANDS

The system must ensure a stable supply.

- Service interval once a year

The system must be redundant.

- Must continue to run with short-circuit error and still supply radio with power

The system must be reliable and safe in error scenario

- Short circuits must be handled safely
  - No damage to equipment or personel

SYSTEM ARCHITECTURE

Single bus unipolar DC

- Commonly used
- Simple

Missing redundancy

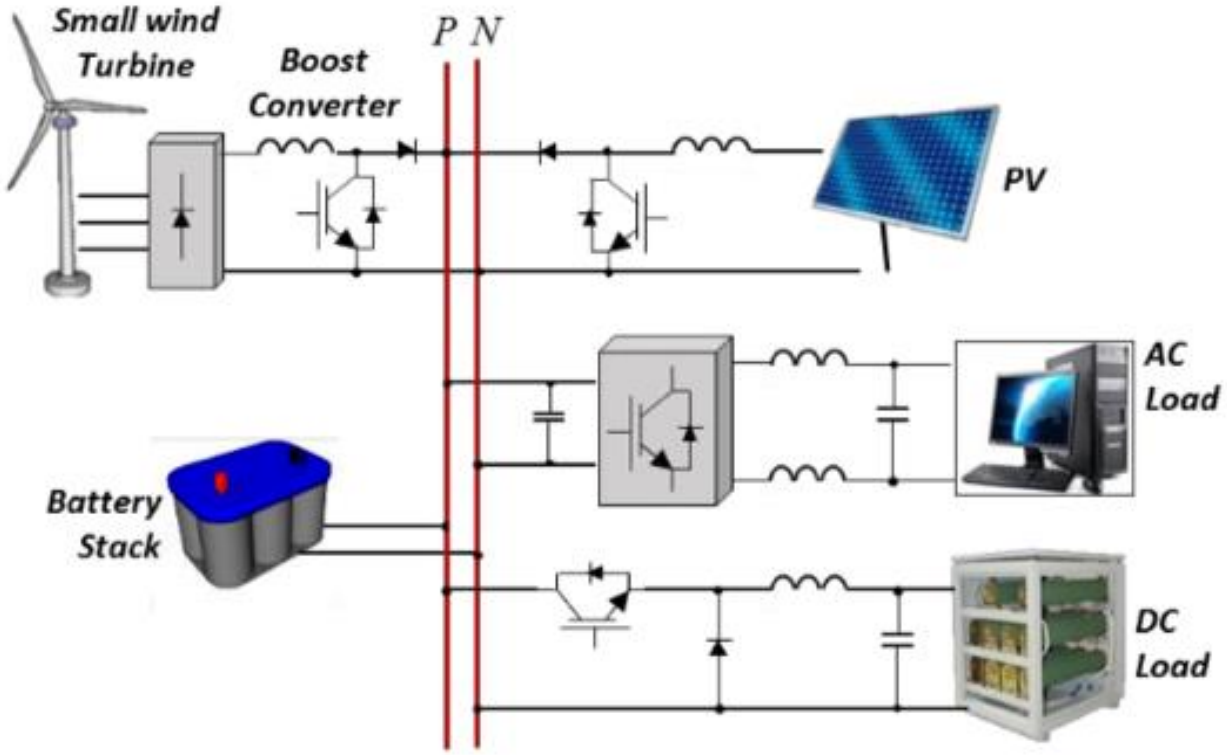

SYSTEM ARCHITECTURE

Single bus bipolar DC

- Increased reliability

Missing redundancy

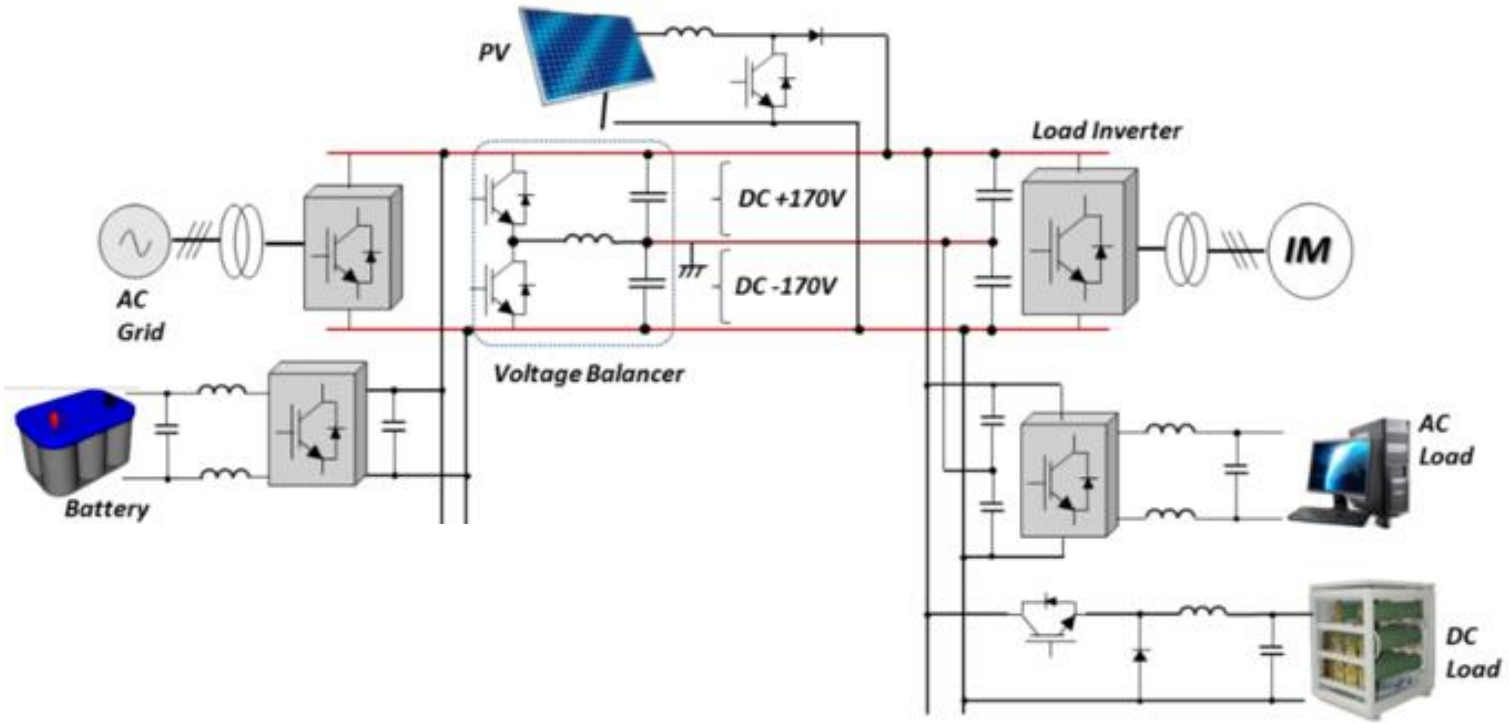

SYSTEM ARCHITECTURE

Ring bus DC

- Increased complexity
- Power under service
- Redundancy!

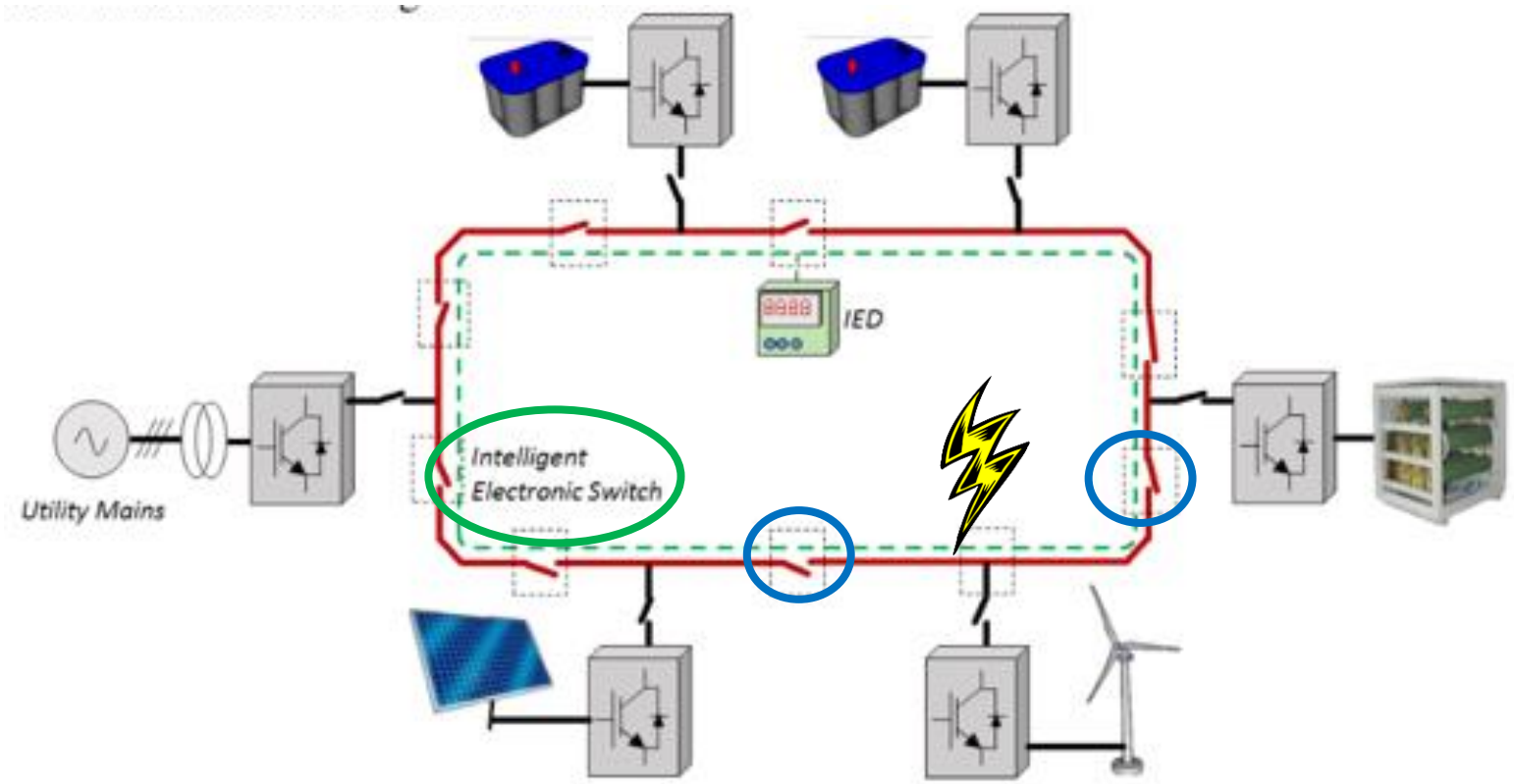

INTELLIGENT ELECTRONIC SWITCH

Determine IF there is a failure

Determine in what direction the failure is

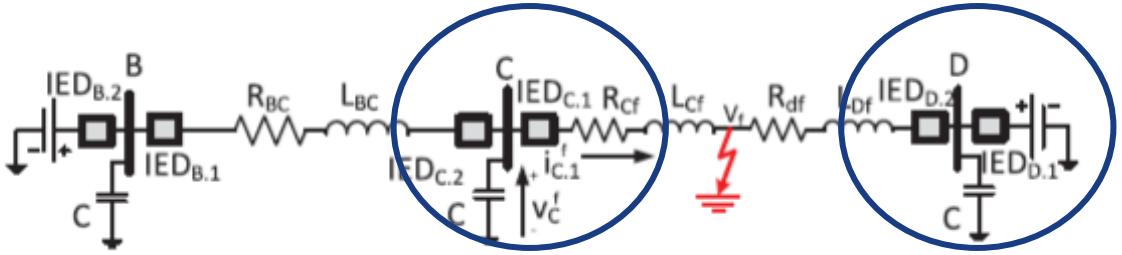

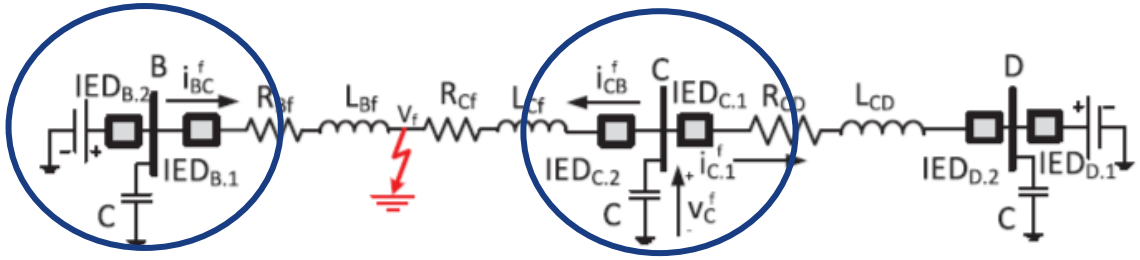

GROUNDING

Very challenging in Greenland

Rocks!

Sea electrode

Conductor to sea with grounding potential

Only possible at stations close to sea

Circular electrode

Long conductor placed in ring around the station

High ground resistance!

SYSTEM PROTECTION - GROUNDING

Grounding is needed

- Fault detection
- Keep stray current low
  - Corrosion
- Minimize common-mode voltage
  - Safety (person and equipment)
- Safe and reliable operation of power supply

GROUNDING CONFIGURATION

TN System

Use the neutral as ground connected

- Advantage
  - Minimized ground potential and enhanced safety
  - Easy detection of faults
- Drawbacks
  - Touch voltage can be too high (safety)
  - Large error currents
  - Ground potential rise

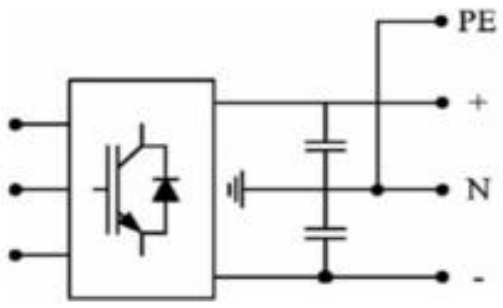

GROUNDING CONFIGURATION

TT System

Separate connection of ground and neutral

- Advantage
  - Minimized ground potential and enhanced safety
  - Easy detection of faults
- Drawbacks
  - Circulating currents
  - Higher voltage stress
  - Ground potential rise

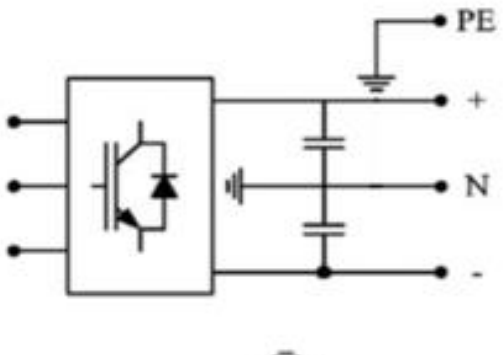

GROUNDING CONFIGURATION

IT System

Positive earth

- Advantage
  - Less corrosion
  - Small currents with Line – Ground faults
  - Good resistance to lightning
- Drawbacks
  - Harder to detect errors
  - Needs insulation monitoring

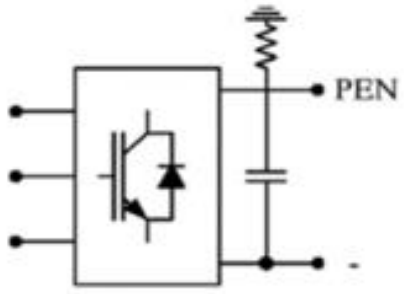

INTELLIGENT ELECTRONIC SWITCH

The key to make a DC micro grid system that is

- Stable
- Redundant
- Reliable and Safe

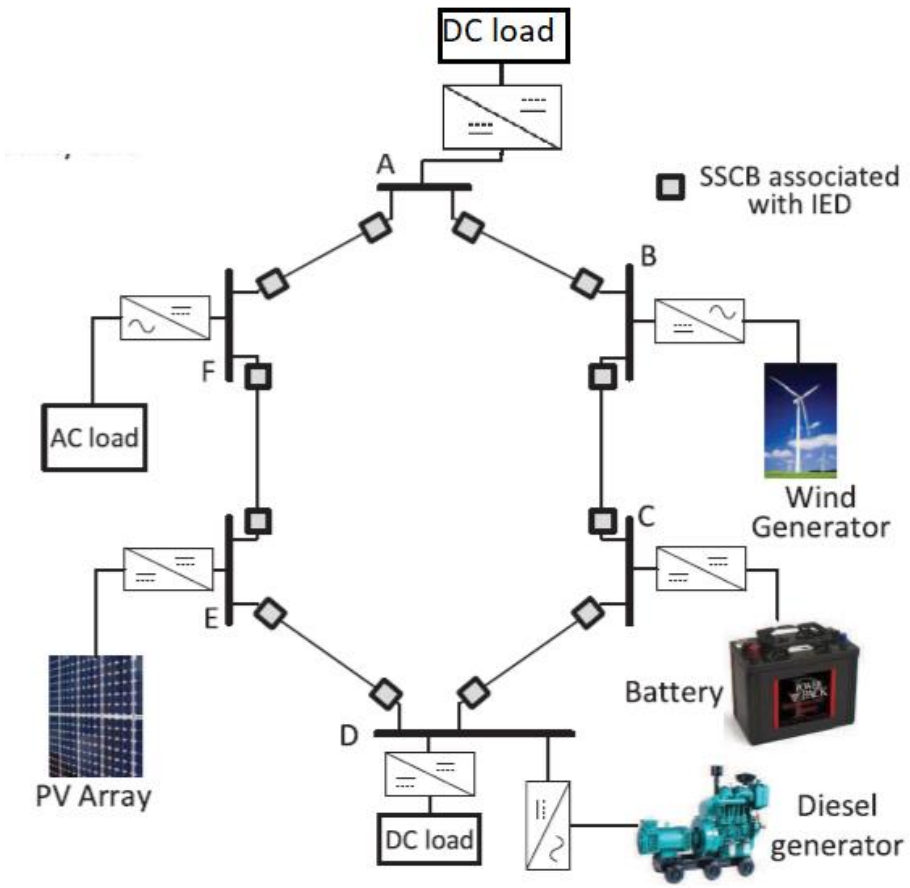

SUSTAINABLE POWER SUPPLY FOR REMOTE RADIO LINK STATIONS IN GREENLAND BASED ON DC MICRO GRID

PROJECT GROUP

ASBJØRN BENNICHE SKOVGAARD
ERIK EMIL HØGEDAL
PER STUBBERUP PEDERSEN

SUPERVISOR

FINN JENSEN